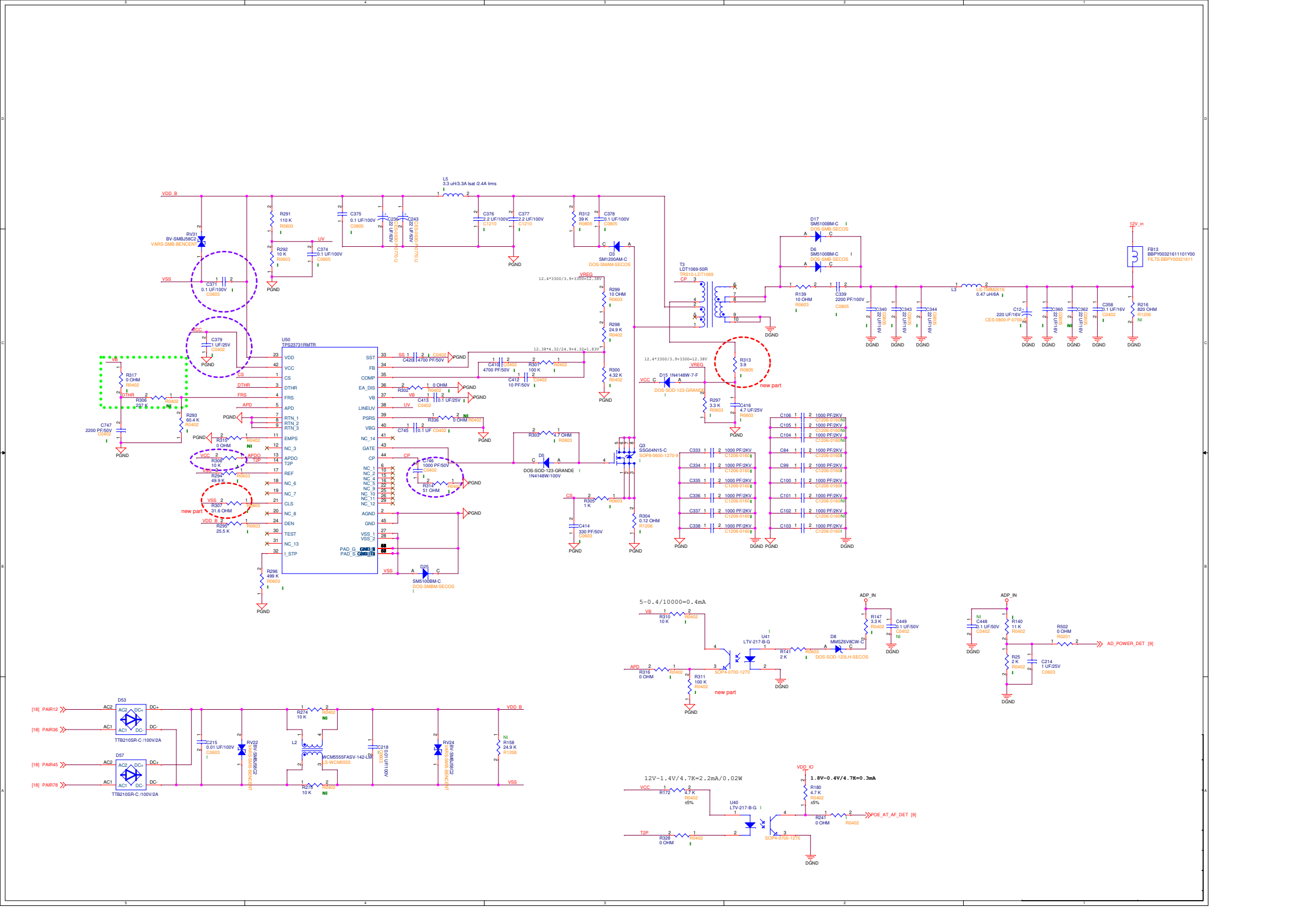

VDD_B
L5
3.3 uH/3.3A Isat /2.4A Irms
RV31
BV-SMBJ58C2
VARS-SMB-BENCENT
R291
110 K
R292
10 K
C375
0.1 UF/100V
C374
0.1 UF/100V
C376
2.2 UF/100V
C377
2.2 UF/100V
R312
39 K
C378
0.1 UF/100V
D3
SM1200AM-C
DOS-SMAM-SECOS
VREG
12.4*3300/3.9+3300=12.38V
R299
10 OHM
R298
24.9 K
R300
4.32 K
T3
LDT1069-50R
TRS10-LDT1069
D17
SM5100BM-C
DOS-SMB-SECOS
D6
SM5100BM-C
DOS-SMB-SECOS
R139
10 OHM
C339
2200 PF/100V
L3
LS-TMIM2016
0.47 uH/6A
12V_in
FB13
BBPY00321611101Y00
FILTS-BBPY00321611
R216
820 OHM
C340
C343
C344
C12
220 UF/16V
CES-0800-P-0700
C358
0.1 UF/16V
C379
1 UF/25V
U50
TPS23731RMTR
VDD
VCC
CS
DTHR
FRS
APD
RTN_1
RTN_2
RTN_3
EMPS
NC_3
APDO
T2P
REF
NC_6
NC_7
CLS
NC_8
DEN
TEST
NC_13
I_STP
SST
FB
COMP
EA_DIS
VB
LINEUV
PSRS
VBG
NC_14
GATE
CP
NC_1
NC_2
NC_4
NC_5
NC_9
NC_10
NC_11
NC_12
AGND
GND
VSS_1
VSS_2
PAD_G
PAD_S
C420
4700 PF/50V
C410
4700 PF/50V
R301
100 K
C412
10 PF/50V
R302
0 OHM
C413
0.1 UF/25V
R336
0 OHM
C745
0.1 UF
C746
1000 PF/50V
R314
51 OHM
R303
4.7 OHM
D5
DOS-SOD-123-GRANDE
1N4148W/100V
Q3
SSG04N15-C
SOP8-0600-1270-9
R305
1 K
C414
330 PF/50V
R304
0.12 OHM
R313
3.9
R297
3.3 K
C416
4.7 UF/25V
D15 1N4148W-7-F
DOS-SOD-123-GRANDE
R317
0 OHM
R306
237 K
R293
60.4 K
C747
2200 PF/50V
R315
0 OHM
R308
10 K
R294
49.9 K
R307
31.6 OHM
R295
25.5 K
R296
499 K
D25
SM5100BM-C
DOS-SMBM-SECOS
new part
C333
C334
C335
C336
C337
C338
C106
C105
C104
C84
C99
C100
C101
C102
C103
1000 PF/2KV
C1206-0160
5-0.4/10000=0.4mA
R310
10 K
U41
LTV-217-B-G
R141
2 K
D8
MMSZ6V8CW-C
DOS-SOD-123LH-SECOS
R147
3.3 K
C449
0.1 UF/50V
R316
0 OHM
R311
100 K
SOP4-0700-1270
ADP_IN
C448
0.1 UF/50V
R140
11 K
R502
0 OHM
R25
2 K
C214
1 UF/25V
AD_POWER_DET [9]
D53
TTB210SR-C /100V/2A
D57
TTB210SR-C /100V/2A
[18] PAIR12
[18] PAIR36
[18] PAIR45
[18] PAIR78
C215
0.01 UF/100V
RV22
BV-SMBJ58C2
VARS-SMB-BENCENT
R274
10 K
L2
WCM5555FASV-142-LM
C218
0.01 UF/100V
RV24
BV-SMBJ58C2
VARS-SMB-BENCENT
R158
24.9 K
12V-1.4V/4.7K=2.2mA/0.02W
R172
4.7 K
U40
LTV-217-B-G
R328
0 OHM
VDD_IO
1.8V-0.4V/4.7K=0.3mA
R180
4.7 K
R241
0 OHM
POE_AT_AF_DET [9]